RTTY

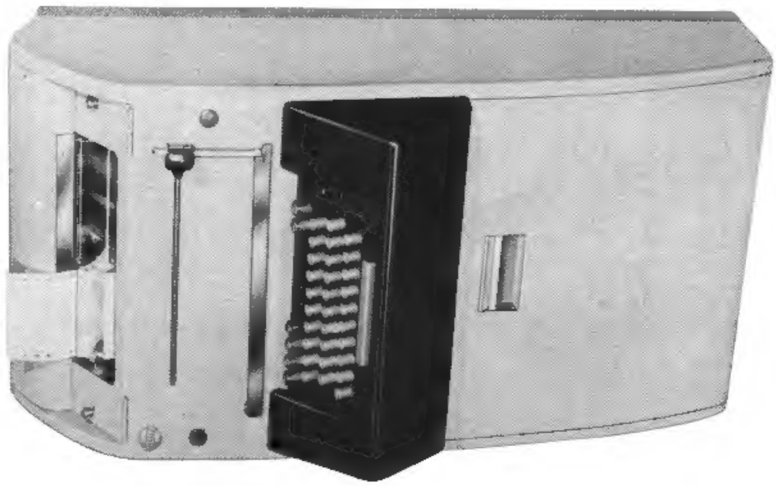

NEW WALL MOUNTED MODEL 28 TELETYPE

RYRYRYRYRYRYRYRYRYRYRYRYRYRYRYRYRYRYRYRYRYRYRYRYRYRYRYRYRY

NEWS OF AMATEUR RTTY

FEBRUARY, 1962
30 Cents
VOL. 10 — NO. 2

HORSE TRADES

This page of the Bulletin is for use of amateurs who have RTTY EQUIPMENT FOR SALE OR TRADE and those looking for equipment to buy or trade. It is a free service and may be the means of getting someone on the air.

RTTY, Inc.
372 WEST WARREN WAY
Arcadia, California
Return Postage Guaranteed

PASADENA FEB 11 AM 1962 CALIF.

FOR SALE: Model 26 with table and Auto Carriage return, good cond. $85.00, K6TVO, 7010 Costello Avenue, Van Nuys, Calif.

WANTED: FSK/TU, state price and condition, J. Dube, K1RPZ, 78 School Street, Gardner, Mass.

WANTED: Good TD at fair price. Nick Thompson, W1LWV, 99 Water St., Millinocket, Maine.

FOR SALE: Or trade, FRA converter, complete with manual, set for 850 cps shift Complete in cabinet ready to go, excellent shape $25.00 Nick Thompson, W1LWV 99 Water Street, Millinocket, Maine.

FOR SALE: 8 cases of perforator tape (11/16"), 40 rolls per carton $10.00 or 10 rolls at $2.50. Shipping weight extra at 50# for 40 rolls and 13# for 10 rolls, Paul Hudson, WA6AVJ, 4135 Jackson St., Arlington, California.

WANTED: 0 5/B or 0 5/C FSK exciter with manual, Ray Nether, W3KFB, RD 1, Box 146, Cheswick, Pa.

WANTED: June 1957, and January, February 1958 RTTYS. Harold V. T'Kach, 1014 Twenty-sixth Avenue NORTH, Minneapolis 11, Minn.

FOR SALE: Model 14 typing reperforator, Fred Schmidt, W4NYF, 405 NW 30th Terrace, Ft. Lauderdale, Fla.

FOR SALE: Model FRF Dual Diversity Converter, with CW-20457 Pwr Supply, CW-35117 Audio Osc, 35118 Converter, $75.00 crated, FOB, WA2MSN, 431 Lincoln Ave., Rutherford, N.J.

FOR SALE: Wheatstone Perf. Tape, W6DOU 3154 Stony Point Road, Santa Rosa, Calif.

FOR SALE: Several Northern Radio Type 105 model 4A keyers with 4B reg power supplies (rack mtg 19") New xtal oven (et al). John Leonard 1424½ D Street, Sacramento 14, Calif.

FOR SALE: Model 14s receive only, typing reperf. Type FPR-5, refinished covers, sync motor, wood base, comm type, good condx $85.00 Model 14 receive only, typing reperf, type FPR-23 High boy, sync motor, refinished cover, comm type excellent condx $120.00, Model 19 complete LESS TABLE, with 14 TD, 15 with perf kybd, sync motor, good condx with FPR23 Typing reperf $370.00, less reperf $250.00, Model 21's collectors items $15.00, Six head TDs with sync motors, good condx $50.00, Carter O'Brien W6YJG, 1123 Pine Street, Santa Monica, Calif.

FOR SALE: AN/TGC-3 complete, (cabinet model 14 nontype, TD) $200.00, TD Model 14 $50.00, URA7- CV-57 $75.00 —also—

WANTED: Table XRT 210 for use with Model 14 type reperf and 14 TD, State price and how ship. Pat Amico, 188-05 50th Avenue, Flushing, New York.

FOR SALE: Model 26, comm type and keytops, with table. Modified contact operate tape head (1-A) AUTO-MATE26 (autocar rel linefeed) $105.00. Also DX-100 with FSK, VF 1w/FSK, Complete mobile. Sell or trade for 14 tape equipment. Sheffield, W4ZPZ, 1518 Oriole Place, Greensboro, N.C.

New, Wall Mounted Model 28 Page Printer By The Teletype Corporation

Teletype Corporation has announced the development of a new page printer that combines the features of the Model 28 line of equipment with space-saving, wall mounted design.

The Model 28 wall mounted page printer is designed for applications where floor space is at a premium. This arrangement frees expensive office space for other productive uses.

The Model 28 wall mounted printer operates at 100 words per minute, but can be converted to 60 or 75 word-per-minute speeds by a simple gear change.

Equipped with Teletype's unique "stunt box," this unit can be operated 24 hours a day if desired, and can perform a variety of switching, signaling and control operations. The stunt box eliminates investment in costly external apparatus for the control of non-printing functions.

Teletype's all-steel clutches are incorporated into the wall mounted printer for positive, slip-free unit operation. These components require an absolute minimum in maintenance.

Printing is accomplished by a light-weight typebox. It can be removed in seconds, without tools, for cleaning or conversion to other typing arrangements.

Any typist can use the wall mounted page printer without special training.

Local function keys, such as carriage return, line feed, line break, etc., are on the upper row of the keyboard.

Optional components for special applications are available. They include sprocket-feed, short-length platen; extra-large typefaces; vertical and horizontal tab; keyboard lock; form-out, and combined carriage return form-out.

The all-steel cabinets come in an assortment of colors, are easily removed for lubrication or inspection of electro-mechanicel components, and are sound-insulated for quieter operation.

The wall mounted page printer is available in send-receive and receive-only models.

Weight of the complete set is approximately 65 lbs., with dimensions of 30-3/4 inches wide and 14-1/4 inches deep.

The Model 28 wall mounted page printer is manufactured for the Bell System and others who desire the ultimate in dependability from their message and data communications systems.

Descriptive literature is available from the manufacturer. Write to Teletype Corporation, Dept SP-16, 5555 Touhy Avenue, Skokie, Ill.

NINTH ANNIVERSARY RTTY SWEEPSTAKES FEBRUARY 23 and 24, 1962

The 1962 Anniversary Contest will be held starting Friday February 23rd at Six PM E.S.T. and run for thirty hours, ending at midnight on the 29th.

Messages shall consist of message number, originating station call, check or RST report of two or three numbers, ARRL section of the originator, local time (0000-2400 preferred), date, and band used (Meters or Megacycles.)

Scoring will be one point for a msg sent and receipted for entirely by RTTY, and one point for a message received and acknowledged by RTTY. Relaying or repeating by a third station disqualifies the message. The total message points is multiplied by the number of ARRL Sections worked to compute final score. Two stations may exchange messages again on a different band for added message points, but the section multiplier does not increase when the same section is worked on another band. ARRL Sections are as listed in QST (usually page 6) covering Canada, U.S.A. and some possessions. Each foreign country not included as a section but regarded by ARRL for DXCC credit is treated as a new section for RTTY multiplier credit.

VERTICAL ANTENNA W9DPY

In our last couple of QSO's, I mentioned the 60 foot vertical. The inclosed picture shows what it looks like. It dwarfs the beam and house in the background.

As nearly as I can tell it runs about 10-20 db higher signal on the west coast than the horizontal. There may be a different story when I get the other tower up and the horizontal at the 60 foot level. The vertical does have one advantage, the SWR is very low and the bandwidth is quite good.

If you refer to Fig. 2 in my sketch, you can prove that any two real impedances can be matched with an L network as shown.

For the theory on this there were several articles by Marshall in the 1949 QSTs. The final and summary article was in the Feb. 1950 QST.

In fact, I usually set the thing up on the work bench with a non inductive resistor load and measure the input impedance with an rf bridge.

The ground plane is 10 radials either .25 wavelengths long on 7 or 3.5 mc. The resistance of the antenna is about 65 ohms on 3.5 mc and 500 ohms on 7 mc.

The nice part of the arrangement is that the L network will make up for minor variations in natural frequency of the antenna as it is very difficult to trim a 60 ft. tower.

In cases where the line impedance is near that of the antenna neither L1 or L3 are necessary. In solving the equations the coil values approach infinity (quite high) and can be eliminated. The circuit of Fig. 1 then becomes the L network of Fig. 2 plus C1 to cancel the reactance of L2 on the lower frequency (or lower impedance condition).

One other word is of interest. The ground plane is a staked end ground plane. The radials are either .25 wavelength on 7 or 3.5 mc and insulated from ground to the end where a direct ground rod is used. The configuration used causes the center impedance of the antenna to be much higher than the conventional 34 ohms assumed.

A couple of side effects can be noticed. The feedline to the "shack" is about 250 ft long and is RG-11/U. There is just no noticeable RF in the shack proper. The receiver S meter only indicates s9 (when tuned to the transmitter and with no antenna) and on the horizontal was far off scale all the time.

The pickup of energy is so high that it drives the indicating meter of a Heath antennascope off scale from broadcast stations several miles away. It is also so high as to produce cross modulation in the RF stage of a lot of the newer receivers from stations up and down the band.

All the best to you Merrill and thanks again for the nice contacts. Let's hope for more.

73

Dave E. Chapman

FINAL VALUES

60' Vert.

70w Line to

65w—80 Ant

& 500 w 40 Ant

C_1—380 uut

L_2—4.4 uhy

C_1—150 uut

SWR—Checks

F.—Mc	SWR—70w
3.5	1.4/1
3.6	1.15/1
3.7	1.06/1
3.8	1.225/1
3.9	1.55/1
4.0	1.75/1
7.0	1.225/1
7.1	1.135/1
7.2	1.105/1
7.3	1.155/1

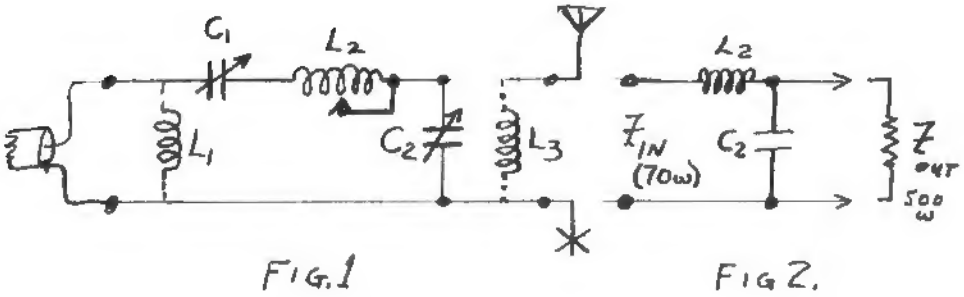

FIG. 1 FIG 2.

A Note on the Selector Magnetic Keyer of Transistor Terminal Units - Van, W3TUZ

Twice recently (and numerous times in the past) I have looked at the circuits of transistor terminal units and have felt the urge to cry "hold, enough"! A terminal unit, which operates at audio frequency and lower and has as output current for driving a selector magnet, is an ideal candidate for transistorization and should be the simplest of devices to design. Sad to state, some of the published examples are complex indeed, and the thought of trying to duplicate the unit is enough to make one's blood run cold.

There are some basic facts of printers and terminal units which seems to have escaped too many designers. First, a magnet depends on current and current is what a transistor handles without complaint. Now, machines have two sections to their magnets and many even have a convenient switch to permit you to choose between a series and parallel arrangement for the two sections. For those without this switch a double pole double throw switch can be added to permit this choice. Paralleling the sections accomplishes a number of laudable objectives, first it decreases the inductance and resistance of the magnet by a factor of 4. Secondly it decreases the voltage required to actuate the magnet by a factor of 2. Thirdly, the price you pay for these benefits is a doubling of the required current, but any transistor worth its salt can easily handle the extra current, and since the decreased inductance will let it reach saturation more quickly, the increased dissipation is relatively small. It should be noted that the steady state collector dissipation of the magnet switching transistor is very small. When the transistor is off there is high voltage and negligible current, when the transistor is on there is high current but negligible voltage. Its half way in between where you get a current maximum. So the moral is obvious, use a parallel arrangement and cut rise time and thus increase the range of your machine or alternatively use the same circuitry as before and cut your required voltage for equal performance by a factor of 2 or more! I might add you can buy better transistors at a lower price if you don't require unreasonably high voltage capability.

So far, so good, with tube the saying was you needed 110 volts at 60 ma and a large resistor. With paralleled arrangement we can use 30 volts or 50 and get no loss in range — and transistor with a BV-ce in this range are not hard to come by. But let's not stop here, there's more we can do. We still have a series resistor, which functions as a current regulator. In a printer the magnet has inductance and when you apply current this has a very high impedance which gradually decreases until it reaches the 50 ohm steady state value. What we really need is a resistor that has zero resistance initially and increases in value as the magnet charges until it reaches a steady state value such that precisely 120 ma. flows. This would also be handy since when we plugged in the reperf, the darn thing wouldn't require adjustment. Here too transistors can do the job for us. Consider Fig. 1 here we have a transistor, a zener diode, two resistors and a potentiometer.

In this circuit the voltage drop across $R_2 + R_3$ is such that at 120 ma. it is equal to the voltage drop across the zener diode. If the current is less than 120 ma. the transistor is practically a dead short, and when the current reaches the zener voltage the voltage drop across the transistor automatically adjusts to give the required current thru the circuit. Here we have still not reached the ideal circuit, we still have R_2 and R_3 always in series but with a four or five volt zener diode the total series resistance is 35 or 40 ohms. The results are faster rise times, again by a factor of 2 or more.

Using both techniques we end up with a keying circuit which, with 25 to 30 volts and 120 ma. gives performance equal or better than tube circuits at 110 v. and 60 ma. I might add the total power is less than 4 watts — compare this with ancient tube units which often required more power than this to light the filament of the keying tube, let alone do any useful work!

A note on the transistor used in the circuit in Fig. 2. In the worst possible case there will be about 20 volts across the transistor at 120 ma. So you have a collection dissipation of about 2.5 watts. A 2N

1172 with a suitable heat sink does the job easily and economically. Larger power transistors could be used but the leakages would be higher and their bulk more formidable.

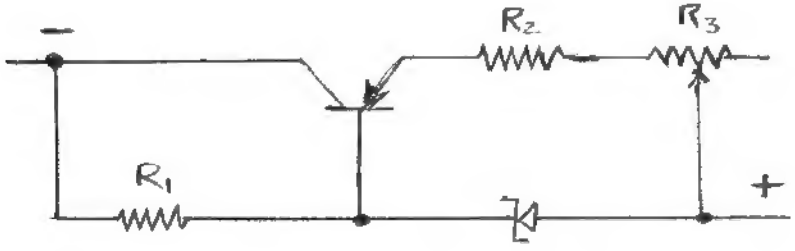

FIG. 1

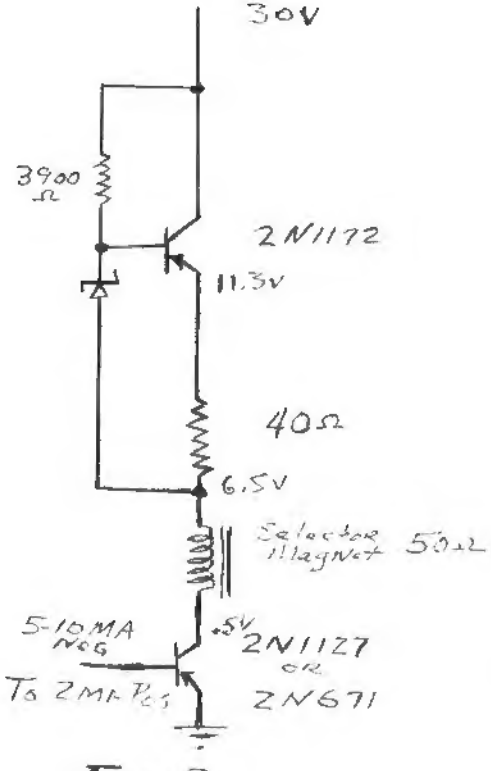

FIG. 2.

Subscription Rate $3.00 Per Year
RTTY is the Official Publication
of the
RTTY Society of Southern California
and is published for the benefit of all RTTY Amateurs and Experimenters
Permission to copy is granted provided credit is given.
For "RTTY" Information:
W6DEO W6CG W6TPJ W6AEE

W7KYO---MECHANICAL AFC

This type of automatic frequency control has been used at this station for sometime with very satisfactory results. I have an HQ 170 receiver with a plus or minus 3KC verinier scale which is just the ticket for this type of control. There are plenty of other receivers kicking around which have good verinier scales and band spread and I thought it might be useful in their case.

The main objection I had with the frequency controlled B F O was that it would not correct the DBS lost on the S meter when the frequency drifted.

The signal for the AFC control can be obtained from your present TU or can be built as a separate complete unit and merely plugged into the headphone jack of the receiver through proper matching transformers. Which ever you prefer the signal is coupled to the discriminater via A .01 coupling capacitor. The 88MH torroids are tuned above and below the mark frequency. 6AL5 was used instead of crystal diodes in order to use higher value load resister. The capacitors across the 500K load resisters broaden the discriminator response. The 1 MEG resisters and .5MFD capacitors give the necessary time delay to hold during spacing signals.

When the signal drifts 25 cycles off of mark plus or minus the associated triode is cut off and the NE51 fires putting a positive potential on the grid of one half of the 6sn7 causing current to flow through one,; winding of the polor relay causing the motor to rotate in one direction or the other. A suction cup fitted to the shaft of the motor gives sufficient traction to the fine tuning knob to rotate it but can still be moved mechanically with the hand if need be.

There is one TV tuner available, MeGee radio under the trade name "IT" which has self contained batteries which is suitable for this operation. Motor speed should be 1 to 3 RPM for best results and depending on the ratio of your dial.

The polar relay contacts must be backed off so that they are not touching the armature, and the pole pieces off just enough so that the armature is not touching them when either contact is made.

The value of capacitors used with the torroids is a matter of experimentation and a good calibrated audio oscillator is real handy to have around the shack.

With this AFC you set your BFO for the mark signal when signal is maximum on the S meter, then just tune close to the frequency and let go and the motor does the rest always maintaining the mark frequency just where the TU works best. On nets where stations are close but not all right on, the AFC takes care of the situation. It will not however take care of a very fast change in the received signal but I find that most of the shift is due to slow changes in receiver or VFO temperature.

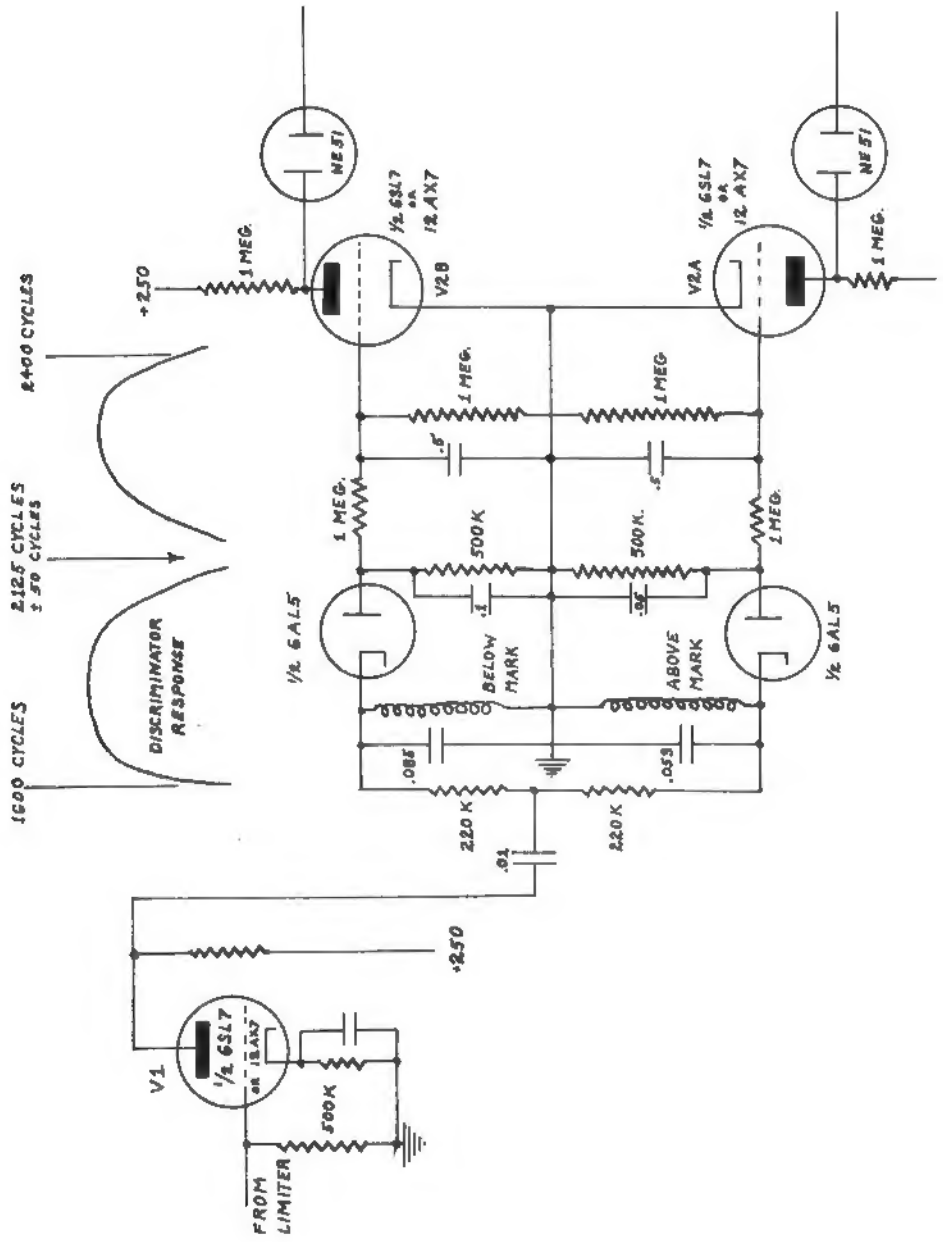
2400 CYCLES
2125 CYCLES ± 50 CYCLES
1600 CYCLES
DISCRIMINATOR RESPONSE
+250
1 MEG.
NE51
½ 6SL7 or 12AX7
V2B
V2A
½ 6AL5
500K
BELOW MARK
ABOVE MARK
.085
.053
220K
.01
V1
FROM LIMITER

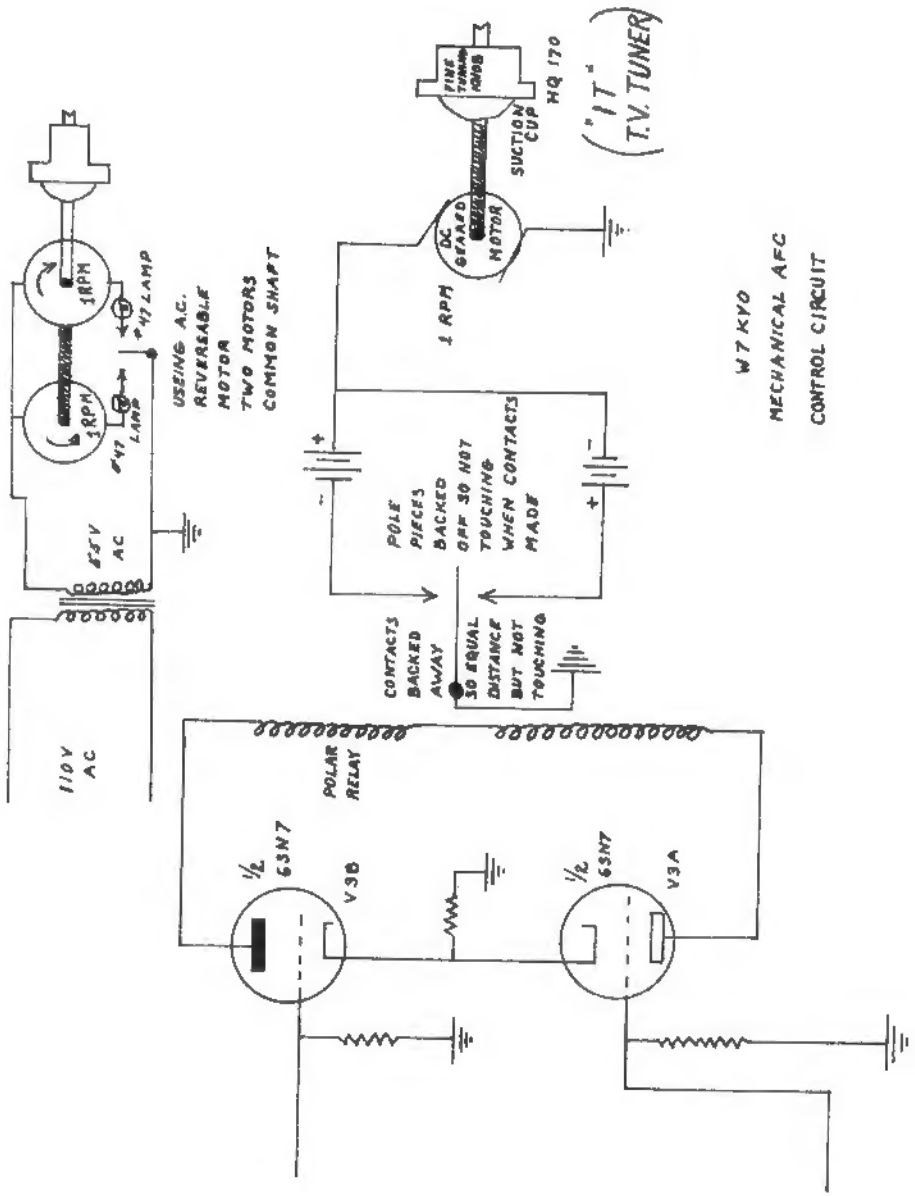
1RPM
#47 LAMP
USEING A.C. REVERSEABLE MOTOR TWO MOTORS COMMON SHAFT
65V AC
110V AC
DC GEARED MOTOR
SUCTION CUP
HQ 170
("IT" T.V. TUNER)
POLE PIECES BACKED OFF SO NOT TOUCHING WHEN CONTACTS MADE
CONTACTS BACKED AWAY SO EQUAL DISTANCE BUT NOT TOUCHING
POLAR RELAY
½ 6SN7
V3B
V3A
W7KVO MECHANICAL AFC CONTROL CIRCUIT

Cats Meeting Held In Chicago

Inclosed are some of the snaps of the CATS meeting last week. Ray Morrison checked his records and was able to identify all but one of the persons.

The meeting was held at the 5th Avenue plant of the Hallicrafters Company. It started with a get together and discussion, in the plant cafeteria. A program of speeches was set up for the afternoon and the meeting ended up with a dinner.

A total 115 registered for the technical session and 85 attended the Banquet. (There were only reservations for 75 and the place was crowded.)

The Olivetti representative, although not a ham brought a complete setup of their equipment. (you can see it at the right end of the table in pictures 2-5)

Picture 1 before the technical sessions shows some of the door prizes. (there was one prize for every other person). Ray Morrison on the right with glasses. George Boyd (MC) directly behind him.

Picture 2 shows one of the Minneapolis gang (I'm not sure about this one) and George Boyd in the background.

Picture 3 shows Jordan Kaplan of Chicago.

Picture 4 shows Chet Horton W9YQH discussing RTTY and CD in Wisconsin.

Picture 5 shows Bob Fincke KOAKG of Minneapolis describing and introducing their X type frequency indicating separator tuning indicator. (this is the one Beep used)

After the above, George Boyd replayed the tape of Phil Catona showing some of the defects originating in different signals. This tape is one of the best jobs of pulling toward better transmissions I know of.

Using the previous tape as a lead in my talk was on oscillator stability and how to measure and compensate for drift. On the left end of the table in pictures 2 and 5 can be seen the equipment for demonstration. The home made VFO described in the August and Sept. 1956 RTTY is the first unit. Then (in 5) a Hallicrafters 100-1000 kc marker. (this must be beat to WWV). The receiver used as a detector is a KE-93. Since all you do is listen to the beat note stability is no concern. The next unit is a Barker and Williamson audio frequency meter.

A sample curve from a General Electric strip recorder was displayed, the recorder in practice being used in the meter circuit of the B&W audio frequency meter. (A Heath unit is also used). The recorder was out of Collins frequency drift measuring equipment.

A discussion of the factors influencing oscillator stability and how to apply them was given. What materials to use and what not to do. Also a discussion of diode keyers was thrown in including the advantages of solid state devices.

After the technical session, the group went to the banquet hall. Ray Morrison donated a 28 machine. As I recall it was won by W8LIM who now lives in Milwaukee. His wife W9VFP was with him and they could not decide which ticket was the winning ticket. So now they will have to operate on alternate days.

Incidentally there were several girls at the meeting. Betty Sandberg W9STR and her OM Dick attended. (this was not the first year for them). Betty is active in the YLRL groups in Chicago.

Well Merrill this gives as much of a rundown as could be accumulated. Teletype was represented by W9COW Steve Janiszewski.

All the best from this end and hope to see you this evening in the contest.

73 W9DPY

Additional Photographs were received from James Agaard and John DuBois, which were included. Thanks to both John, Jim and Dave—Ed.

W9SPT

W9QKE
W9SPT

K9OUV

W9SPT

DUBOIS K9YHQ
KAPLAN W9QKE
LARSON K9VUT
Looking at H1 Speed Tape gear

W9SIR
W9SIQ

W9WBE
K9VUT
H1-H1 Speed tape gear
600 WPM

Chet Harlan W9YQH

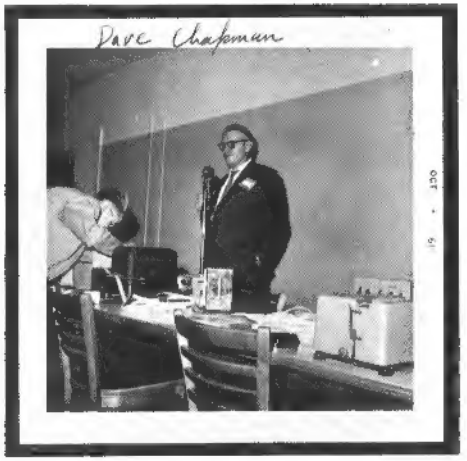
Dave Chapman

DX - RTTY

BUD SCHULTZ, W6CG
5226 N. Willimonte Ave., Temple City, California

Howdy Gang:

For the first few days of the month conditions were so poor that I thought I might have to write a column on stamp collecting or one on "how to raise chinchillas" but things straightened out and the DX situation is again under control. As this nonsense is being typed out on my portable Smith-Corona, Henry-ZS1FD is clacking away on the Model 15 at my elbow and making solid copy on 21,090 Kcs. He reports conditions are quite good on fifteen and he has been able to make some real fine contacts. Henry has received his TD from Dick, W7LPM and says it really helps in the "CQ DX" department. He also mentioned that the W4's like W4BOC are coming thru to Capetown like locals!! Here's another red hot news item! —Just took time away from this writing chore to have a fine FSK contact with Bill, ZK1BS who is trying out a new Thunderbird beam. His signals on 21,090 (2100 GMT) were a solid S-8 and landline copy. Bill is still anxious to get a contact with ZS1FD to try and finish his WAC —RTTY Award. He has never quite recovered from the disappointment of missing a QSO with I1RIF during the Contest. Bill reports that he will be leaving the Cook Islands in about a year and hopes to go to France or Italy for a while where Mavis, his XYL, will study painting. Then he is coming to the States and decide where he will spend his retirement.

Still no contacts to report with the VK-ZL group. Perhaps, now that ZK1BS is starting to come thru we can expect such as VK3KF, ZL1WB, ZL3HJ and company to start showing again. The Chief Editor passed along a newsy letter from Arthur, ZL3RT/ZL3RU who expects to be in full RTTY operation shortly. Arthur's letter was written on the new letter-head of the Southern Pacific Radio Amateur Teleprinter Society (SPRATS-to you!!). Listed on the letterhead is the following officers: President —ZL1WB, Vice-presidents — ZK1BS, VK3-KF, ZL2AFZ, Secretary — ZL3HJ. With such a distinguished alignment of officers the SPRATS can't help but be a real live-wire organization. Good luck, fellas!!

As usual Ed Clammer, K3GIF, comes up with a flock of DX news to report. During the past month Ed has been keeping skeds with the English gang on 3635 Kcs with encouraging results. So far he has printed G3CQE, G3BXI, G3GNR, G3FHL and G6-FO on eighty meters!! Ed reports that at times some of the above were as strong as S-8 and made excellent copy. He was particularly impressed by the fine copy from G3FHL, who has not heretofore been listed in these DX news columns. KG3IF has been continuing to keep his skeds with ZS1FD on week-ends at around 2200 GMT. Ed also has been printing DJØDD working W2JJC on 14 Mcs. According to this same report from Ed, YV5AFA should be active on fifteen by the time this gets to the printers.

Cole, KR6MF, writes that he is installing an autocarriage/line feed kit on his model 15 and a new 1.5 kc. filter in the 75A4 to improve his operation. He states that he will continue to send Airmail QSLs to all first contacts on RTTY, provided he has a mailing address for the station concerned. Here is a quote from KR6MF's letter regarding the QSL situation: "Eric (VK3KF) mentions that he has held very poor results on QSL's from G land and W/K (less than 50% in some cases). I have found that I have much better percentage on RTTY QSLs than on AM (Could the fact that I am in Asia have something to do with it?)". Just off hand, Cole, I would say that the fact that you are the only active Asian on RTTY might have just a wee bit of influence on your QSL percentage!! However, I still don't understand why Eric's QSLs are not in greater demand because he is still the only active VK station on the RTTY channels.

From Rangoon, Burma comes word that the Model 15 that W6AEE shipped to XZ-2AD arrived in good shape and all that is now holding up operations is the necessary terminal equipment. Any ideas on this latter problem from some of you erstwhile DX hounds would be appreciated. This is one that we sure would like to get operating as quickly as we can.

Doc Gee, G2UK, writes that he is booked up for quite a number of lectures on RTTY to Radio Clubs. To quote from his letter—"Anyone with spare 35 mm transparencies of RTTY interest might like to know that I will swap one 35 mm black and white transparency (preferably color) of his. I've made up a nice set of 35 mm transparencies showing circuits, gear, personalities etc. which I find helps to make the lectures far more interesting than just talking." If interested you might drop Doc a line.

Don't forget the Ninth Anniversary SS Contest — Feb. 23rd & 24th and although the rules are the same for all — please give a listen for the overseas lads and give em a chance to get in on the fun! That's it for now — thanks for the use of the Hall and hope to see you all here next month.

73
Bud W6CG

THE SMILE BELONGS TO RON, ZS1NE

FRANK, YV1EM

G3CQE RECEIVES WAC AWARD FROM G6NZ AT ANNUAL BARTG MEETING.